Pico Repeater ICS Portable 3G & 4G

Model/Type : GW-ICS-WCDMA2100-17 & GW-ICS-LTE1800-17

Product Overview :

Global Wave ® ICS Repeater provides the most cost-effective solution to improve user experience of high quality mobile services in indoor environment such as houses, hotels, hot spots, shops, offices, meeting rooms, apartments, and so on. Equipping innovative plug-and-play enabling technologies, general users are able to easily install by themselves without any professional skill. Software Programmable Channel Bandwidth feature facilitates the scalable operating bandwidth for the operators. 30dB Adaptive Echo Interference Cancellation ***Global Wave*** ® Cognitive Auto Power Level Control makes ***Global Wave*** ® ICS Repeater able to adapt to the time-variant isolation environment and further provides the optimized signal coverage all the time.

Significant Features

- ICS Repeater of Single Band
- GSM/DCS/WCDMA/LTE FDD/TD-LTE
- 17dBm of Output Power
- 75dB of Maximum Gain
- Programmable Sub-Block Bandwidth
- Adaptive Echo Interference Cancellation to Increase at Least 30dB of Isolation
- Plug-and-Play (PnP) with Built-in Donor and Service Antennas
- Switch Type of Built-in Antenna and External Antenna
- Light Weight and Small Dimension
- Low Power Consumption without Any Cooling Fan Inside
- Coverage of A 100~150m^2 Apartment or A 600~900m^2 Basement
- MIMO Support by Combining Two Units with External MIMO Antennas

Applications :

Blind or weak signal areas like underground business places, basements, underground parkings, etc.;

Blind or weak signal areas in the dense resident buildings;

Small-size areas like meeting rooms, supermarket, scriptorium, small public areas etc.;

Heavy traffic and social public areas like internet bars, coffee shops, gym clubs, entertainment places, etc.; Elevators, especially where the cables are difficult to be distributed.

Pico Repeater ICS 3G & 4G

Technical Specifications :

3G / 4G Digital Single Band ICS Repeater with Multiple Sub-Blocks				
System	GSM 900	DCS	WCDMA	LTE
Frequency Range (MHz)	UL 890~915 DL 935~960	UL 1717.5~1732.5 DL 1812.5~1827.5	UL 1955~1970 DL 2145~2160	FDD for 3GPP Band 1/3/7/8/20/28 TDD for 3GPP Band
Bandwidth/Number of Sub-block	200KHz ~ 5MHz Programmable/ 4 Sub-blocks within window size 25MHz	200KHz ~ 5MHz Programmable/ 6 or 8 Sub-blocks within window size 75MHz	5/10/15/20MHz Programmable/ 4 Sub-blocks within maximum window size 60MHz	5/10/15/20MHz Programmable/ 4 Sub-blocks within maximum window size 75MHz
Max. Output Power UL/DL	17/17 dBm			
Max. Gain	≧75dB			
Manual Gain Control	≧30dB@1dB/Step			
Automatic Gain Control	≧30dB			
Gain Flatness	≦±1.5dB			
Group Delay	≦ 7μs			≦ 4.5μs
UL/DL EVM	≦10% (at Max. Output Power)	≦10% (at Max. Output Power)	≦8% (at Max. Output Power)	≦8% (at Max. Output Power)
UL Noise Figure	≦5dB (at Max. Gain)			
VSWR	≦1.4			
Max. Input Power Without Damage	≧0dBm (UL&DL)			
Synchronization Detection Sensitivity	N/A	N/A	N/A	For TDD only RSRP □ -110dBm @ 20MHz
Frequency Stability	Compliant to ETSI EN 300 609-4		Compliant to 3GPP TS 25.106	Compliant to 3GPP TS 36.106
Out of Band Gain	Compliant to ETSI EN 300 609-4		Compliant to 3GPP TS 25.106	Compliant to 3GPP TS 36.106
Unwanted Emission (Emission	Compliant to ETSI EN 300 609-4		Compliant to 3GPP TS 25.106	Compliant to 3GPP TS 36.106
Spurious Emission	Compliant to ETSI EN 300 609-4		Compliant to 3GPP TS 25.106	Compliant to 3GPP TS 36.106
Intermodulation	≤-40dBc		≤-40dBc	N/A
Input Intermodulation	N/A		Compliant to 3GPP TS 25.106	Compliant to 3GPP TS 36.106
Output Intermodulation	N/A		Compliant to 3GPP TS 25.106	Compliant to 3GPP TS 36.106
Adjacent Channel Rejection Ratio	N/A		Compliant to 3GPP TS 25.106	Compliant to 3GPP TS 36.106
PCDE	N/A		≦-35dB	N/A
Built-in Serivce Antenna (Optional)	Antenna Gain≧ 2dBi for Frequency Band < 1700MHz Antenna Gain ≧ 5dBi for Frequency Band < 1700MHz Switch Type with External Service Antenna			
External Antenna (Optional)	Antenna Gain ≧ 5dBi			
RF Connector	SMA Female, BS Port for External Donor Antenna x1, MS Port for External Service Antenna x1			
Impedance	50Ω			
Power Supply	100~240ACV, 50/60Hz			
Power Consumption	≤ 12W			
Dimensions	189mm x 170mm x 67mm(finished repeater), 150mm x 164mm x 20mm(module),			
Weight	≦1.2 kgw			
IP Rating	IP40			
Operating Temperature	-30°C ~ +55°C			
MTBF	50,000 hrs			
Automatic Shut-down Function	RSSI Overpower/Underpower Shutdown, Isolation Shutdown			
LED Indicators(Optional)	RSSI: Green LED x4 to Indicate DL Received Power Strength AGC: Red LED x1 to Indicate AGC Out of Range Alarm Power: Green LED x1 to Indicate The Unit Is Operating Sleep: Green LED x1 to Indicate UL Transmission Mute Output Power: Green LED x4 to Indicate DL Output Power			
Local Control	OMT over Mini-B USB or RS232			

Product Picture :
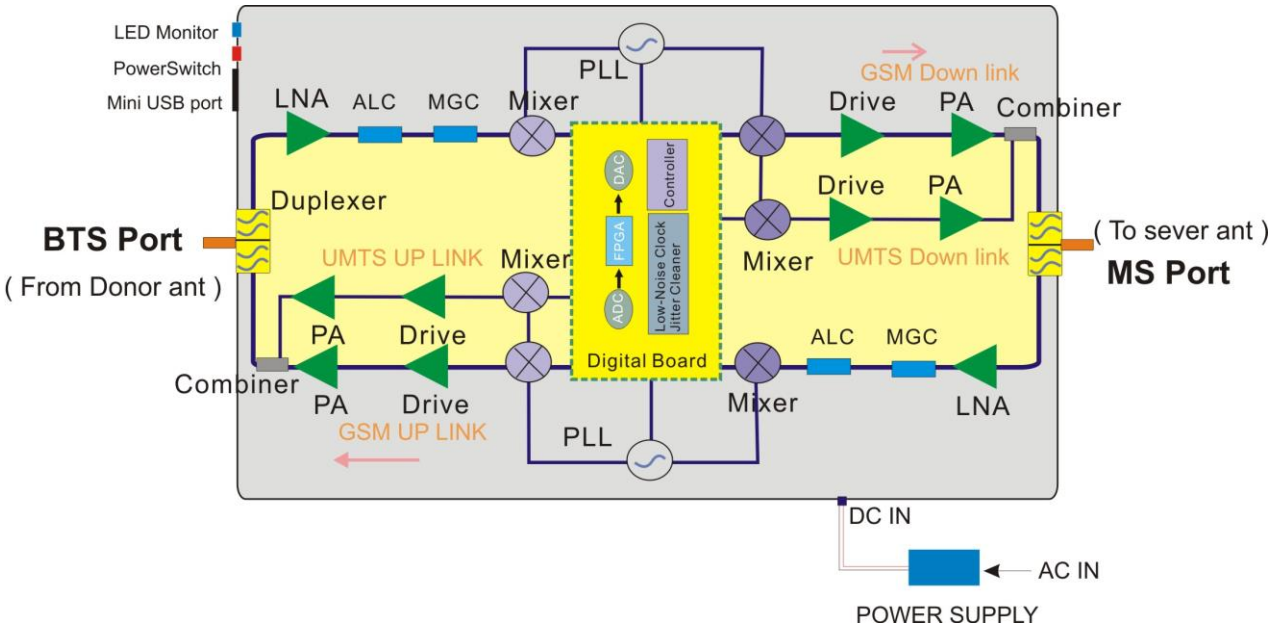
Principle Diagram :